# Appendix 3

# Technical Requirements

# For

# Embedded Generators

# Wanting To Connect

# To

# Brantford Power's

# Electrical Distribution System

# *Introduction*

These technical requirements for Embedded Generation ("EG") are to ensure public and employee safety, to protect the integrity of Brantford Power's system, and guarantee reliable and quality service to Brantford Power customers. The technical requirements in this document are for the protection of Brantford Power's facilities, and the EG should satisfy itself as to any requirements for the protection of its own facilities.

The requirements below are primarily from Appendix F.2 of the Distribution System Code's ("DSC"), Institute of Electrical and Electronics Engineers ("IEEE") Standard 1547, and CAN/CSA C22.2 No. 257-06 (R2011). EG developers are encouraged to consult the listed references for more details.

Additional requirements may be necessary to address unique situations, and EG developers will be advised of any additional requirements at the appropriate assessment stage.

Brantford Power accepts no responsibility or liability for any of the information provided in this document, which has been provided for guidance purposes only. Meeting these requirements does not necessarily constitute an acceptable facility design. Brantford Power reserves the right to amend any of these requirements at any time.

# 1. Connection Impact Assessment – Initial Review

Technical requirements for interconnection of the EG with Brantford Power are checked during the Connection Impact Assessment stage. This initial review is intended to determine the viability of the EG developer's project and to provide the applicant an opportunity to evaluate the situation before making further investments.

## 1.1. Facility Design Overview

### 1.1.1. Single Line Diagram ("SLD")

For the initial review, a high-level single line diagram of the proposed facilities is required.

Major equipment such as the transformer, disconnection device, generator and their respective ratings should be included. Please see the *Embedded Generation Connection Application Form* for information to be submitted. Appendix 6.

A typical arrangement of a generation facility connected to the utility distribution system is shown below in Figure 1. The actual design may vary due to local circumstances, design requirements and generation facility use.

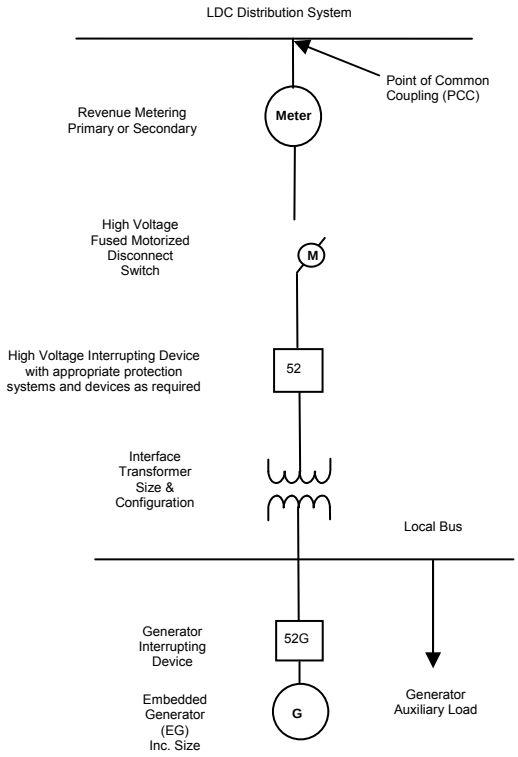


**Figure 1** Typical Single Line Diagram Required at the Connection Impact Assessment Stage

### 1.1.2. Point of Disconnection – Safety

A point of disconnection is required to isolate the EG for the purpose of work protection for Brantford Power crews. Switching, lockout and tagging procedures shall be coordinated with Brantford Power.

The disconnect or isolation device must be

- Readily accessible by Brantford Power.
- Lockable
- Gang operated
- Visible open point
- Located between the PCC and the EG
- Have visible warning signs that inside parts can be energized when the switch is open

Reference codes and standards that apply to the disconnect or isolation device are as follows: Ontario Electrical Safety Code ("OESC") rule 84-026, IEEE Standard 1547 Clause 4.1.7, CAN/CSA-C22.2 No. 257-06 (R2011) Clause 5.3.4 and DSC Appendix F.2 Section 1.

### 1.1.3. Preferred Interface Transformer Configuration and HV Interrupting Device

The table below lists the configuration that will normally be required by Brantford Power for the EG facility interface transformer. The interface transformer connection significantly affects the EG interaction with the distribution system under steady state and fault conditions therefore the specification is critical to avoid adverse effects.

Selecting an appropriate configuration is dependent on the local distribution system at the point of connection. The configurations suggested are applicable for the majority of connections. Brantford Power will assess each connection individually to determine the required configuration based on the local conditions. In some situations an EG neutral impedance or grounding transformer may be required. Effective grounding criteria of the distribution system must be maintained so that the maximum overvoltage on the distribution system under fault conditions is less than 125% of the nominal steady state voltage. The HV interrupting device should be a breaker capable of withstanding 220% of the interconnection system rated voltage.

| EG Rating | Distribution System Grounding Impedance (Low, High*) | Interface Transformer Configuration (HV:LV) |
|---|---|---|
| > 1 MW | Low | Wye Ground / Delta |
| > 1 MW | High | Delta / Wye Ground |
| < 1 MW | Low | Wye Ground / Wye Ground |

* Low impedance grounding is where effective multi point grounding can be achieved. Brantford Power's distribution system is multi point grounded and generally low impedance. High impedance grounding is where effective multi point grounding cannot be achieved and unlikely to be required to connect to Brantford Power's distribution system and is included in the unlikely circumstance it needs to be considered.

| ***2. 1.2 Equipment Rating and Requirements Reference*** | |
|---|---|
| The generation facility interface equipment shall be compatible with Brantford Power equipment design and ratings under all operating conditions.<br><br>Equipment ratings to be reviewed, but are not limited to, are:<br><br>- Equipment **thermal loading limits.** This equipment includes feeder conductor/cable, station breaker and transformer ratings.<br>- Impact of generation facility **fault contribution** on equipment rating - If power is to be exported to the distribution system then all **metering devices** shall be suitable for **bi-directional flow**. | DSC Appendix F.2 Section 5 |
| **1.3 Voltage Regulation Reference** | |
| Voltage variations at the point of common coupling ("PCC") are limited to **+/- 6%** of the nominal voltage.<br><br>The generation facility should not actively regulate the voltage at the PCC but not including regulation to maintain power factor)<br><br>During normal operation, the generation facilities, particularly multiple units, must be **loaded and unloaded gradually** to allow adequate time for regulating devices to respond and avoid excessive voltage fluctuation.<br><br>The generation facility must not further deteriorate existing **unbalanced** conditions.<br><br>The generation facility shall not cause objectionable voltage and current **unbalance** conditions. The generation facility shall not cause voltage unbalance beyond 3% and current unbalance beyond 10% at the PCC. | CSA CAN3-C235<br>IEEE 1547 Clause 4.1.1<br>DSC Appendix F.2 Section 3<br>CAN CSA C22.2 No. 257-06 (R2011) Section 5.2.3 |

## 1.4 Synchronization Reference

The generation facility shall parallel with the distribution system without causing a **voltage fluctuation** of **+/- 5%** of the prevailing voltage at the PCC

Interconnection shall take place only when the differences in **frequency, voltage and phase angle** are within the limits shown below.

**Table 2**

| Total DR System Capacity | Frequency Difference | Voltage Difference | Phase Angle Difference |
|---|---|---|---|
| 0-500 kVA | 0.3 Hz | 10 % | 20° |
| >500-1500 kVA | 0.2 Hz | 5 % | 15° |
| > 1500 kVA | 0.1 Hz | 3 % | 10° |

CAN CSA C22.2 (R2011) No. 257-06 Section 5.3.21
IEEE 1547 Clauses 4.1.3, 5.1.2
DSC Appendix F.2 Section 3.2
OESC rule 84-006

## 1.5 Feeder Relay Directioning

To prevent sympathetic tripping of the EG feeder due to faults on adjacent feeders, breaker protection may need a directional feature for reverse fault current conditions.

Transmission Station relay settings may need to be changed so that protection systems are co-ordinated.

DSC Appendix F.2 Section 8

Brantford Power requirement

## 1.6 Monitoring Reference

A generation facility with total capacity rated less than or equal to **250 kW** at the PCC, shall have ***provision*** for monitoring item a) below and b) to e) below to be determined by Brantford Power. If monitoring data is not required at the time of connection, the design shall include provisions for future installation.

For a generation facility with total capacity rated greater than 250 kW but less than 10 MW items a) to e) shall be ***actively monitored***. In this case, monitoring typically includes status of load interrupting switches, circuit breakers and interface protection annunciation. Communication media options will be mutually agreed upon.

a) Connection status of disconnect device and individual EG units
b) Net active power (MW) output and reactive power (MVAR) flow and direction for each unit or total for the EG Facility;
c) Phase to phase (preferred) or phase to neutral voltages
d) Three phase currents
e) Select alarms (e.g. Relay/Inverter status)

DSC Appendix F.2 Section 9
IEEE 1547 Clause 4.1.6
CAN CSA C22.2 (R2011) No. 257-06 Clause 5.3.22

| | |
|---|---|
| **1.7 Power Factor Reference** | |
| The generation facility operation shall not adversely affect voltage at the PCC. The preferred power factor range of operation is **0.9 lag to 0.95 lead**. This range may be narrower if required in some situations. Systems of 30 kW or less are generally not required to be capable of adjusting power factor.<br><br>For large facilities that have an impact on the IESO, the EG units shall have sufficient reactive power compensation such that there is no material increase at the transmission system terminal station. | DSC Appendix F.2 Section 4<br>CAN CSA C22.2 (R2011)<br>No. 257-06<br>Clause 5.3.13 |
| **1.8 Maximum Power Transfer & Synchronous Stability Reference** | |
| To ensure distribution system stability and prevent adverse effects on the steady state voltage profile of the feeder, the maximum power export of a generating facility shall be limited so as to not exceed 10° phase shift between line ends. | Brantford Power Requirement |

# 2 Design Review

The design review ensures detailed engineering is in compliance with Brantford Power requirements. It is recommended that this review be completed before proceeding with equipment purchase.

A sample single line diagram below provides the details required at this stage.

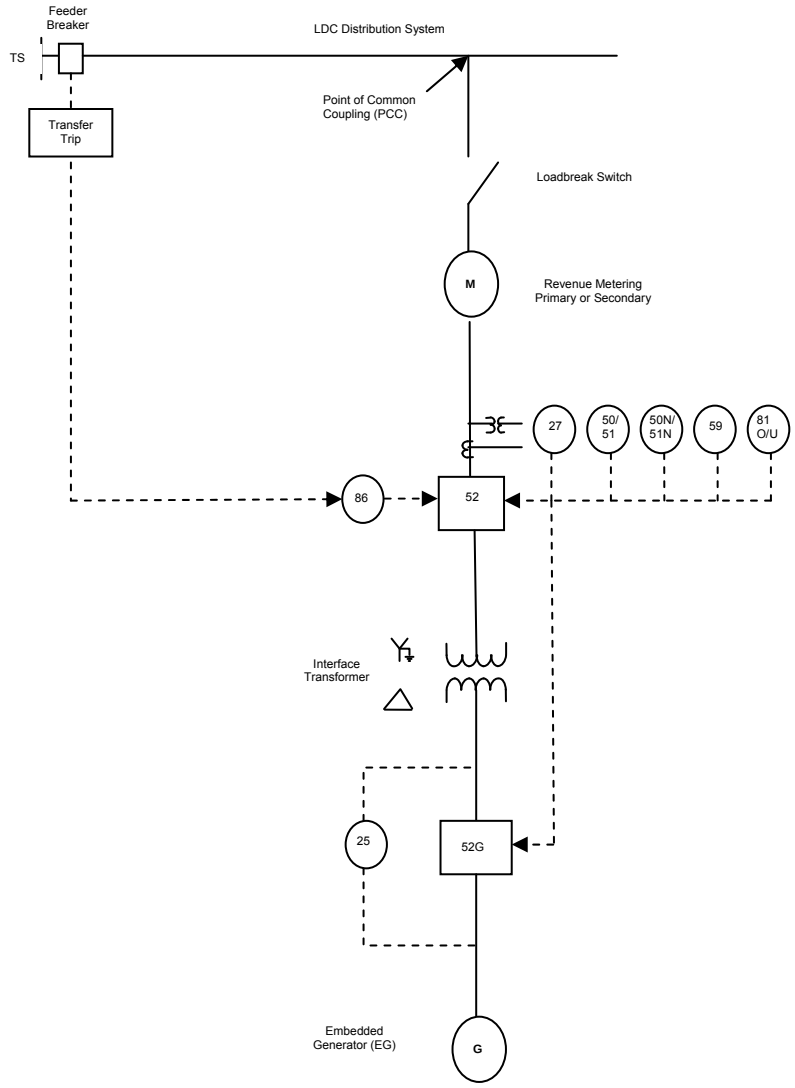


**Figure 2** Typical Single-Line Diagram Required at the Design Review Stage

## 2.1 Cease to Energize Reference

### 2.1.1 Distribution System Faults and Customer Facility Faults

Interface protection of the generation facility shall **cease to energize** Brantford Power's distribution system under the following conditions:

**Internal Faults** within the EG facility.
**External Faults** on the Brantford Power Distribution System.

Equipment and Conductors energized from both directions shall have suitable protection from each supply source.

DSC Appendix F.2 Section 6.4
IEEE 1547 Clause 4.2.1
OESC 84-014
CAN CSA C22.2 (R2011) No. 257-06 Clause 5.3.8

### 2.1.2 Feeder Breaker Reclosing Coordination

The generation facility shall cease to energize Brantford Power's feeder before automatic reclosing of the breaker takes place.

Brantford Power's 27.6 kV feeders incorporate an auto reclose operation typically one to one and a half seconds in duration depending on the transformer station.

IEEE 1547 Clause 4.2.2
DSC Appendix F.2 Section 6
CAN CSA C22.2 (R2011) No. 257-06 Clause 5.2.9

### 2.1.3 Over-Voltage and Under-Voltage Protection

The typical range of protection settings shall comply with the following table:

| Voltage at PCC | Clearing Time Range |
|---|---|
| V<50% | Instantaneous to 0.16 s |
| 50% ≤ V < 88% | Instantaneous to 2 s* |
| 106% < V ≤ 110% | 0.5 s to 2 minutes |
| 110% < V ≤ 120% | Instantaneous to 2 minutes |
| 120% < V < 137% | Instantaneous to 2 s* |
| 137% ≤ V | Instantaneous |

**Response to abnormal voltages**

* To satisfy system requirements, two over-voltage and under-voltage set points may be required.

The actual clearing times may vary within the above range due to distribution system conditions and generation facility protection design.

IEEE 1547 Clause 4.2.3
DSC Appendix F.2 Section 6.5
CAN CSA C22.2 (R2011) No. 257-06 Clause 5.3.9
Brantford Power Requirement

### 2.1.4 Over-Frequency and Under-Frequency Protection

The generation facility shall cease to energize Brantford Power's distribution system at the frequency set points and clearing times outlined in the table below.

**Response to abnormal frequency**

| Adjustable Set Point | Clearing Time |
|---|---|
| 59.3 to 55.5 Hz | 0.1 to 300 s |
| 60.7 to 63.5 Hz | 0.1 to 180 s |

IEEE 1547 Clause 4.2.4
DSC Appendix F.2 Section 6.5
CAN CSA C22.2 (R2011) No. 257-06 Clause 5.3.10
Brantford Power Requirement

| | |
|---|---|
| To satisfy system requirements two over-frequency and under-frequency set points may be required. | |
| **2.1.5 Interface Protection System** | |
| The interface protection study shall include coordination of key interface protection elements, along with the proposed relays and settings to be used at the PCC. The protection study submission shall include required AC & DC schematics and wiring diagram. | DSC Appendix F.2<br>Section 6<br>Brantford Power Requirement |
| **2.2 Connection to Brantford Power System Reference** | |
| Connection to Brantford Power's System following a grid disturbance shall take place only when the voltage at the PCC is within 6% and frequency between 59.3 and 60.5 Hz.<br><br>The generation facility shall reconnect no less than 5 minutes after the system has stabilized within the above voltage and frequency ranges. Where multiple units on the same feeder are involved, staggering the reconnection times may be required.<br><br>For generating facilities that incorporate transfer trip protection reconnection will occur in accordance with paragraph 2 above.<br><br>If transfer trip communication media fails the generator is expected to trip off line in a controlled manner and shall reconnect when the communications are remedied. | DSC Appendix F.2<br>Section 6<br>IEEE 1547 Clause 4.2.6<br>Brantford Power Requirement |
| **2.3 Anti-Islanding Protection and Transfer Trip Requirements Reference** | |
| The generation facility shall disconnect from Brantford Power's System upon the loss of utility supply voltage in one or more phases.<br><br>Local islanding protection at the generation facility is required.<br><br>For mid-sized generating facilities or aggregated generation <u>facilities with capacity greater than 50% of the minimum feeder load</u> or where the reclosing interval is less than 1.0 second, the design shall include a Transfer Trip scheme to prevent islanding. In this case, Embedded Generator End Open (EGEO) logic is to be included to supervise the auto reclose operation of the feeder breaker. | DSC Appendix F.2<br>Section 6.1.2<br>IEEE 1547 Clause 4.4.1<br>OESC rule 84-008<br>CAN CSA C22.2 (R2011) No. 257-06 Clause 5.3.11<br>Brantford Power Requirement |
| **2.4 Grounding at the Generation Facility Reference** | |
| The generation facility's grounding scheme shall not cause over voltages that exceed the rating of Brantford Power equipment.<br><br>The generation facility will not disrupt the co-ordination of ground fault protection of Brantford Power's distribution system<br><br>Generation and interconnection facilities must be grounded as per manufacturer's specifications and the OESC.<br><br>Wind generation facilities may be restricted from connecting to the distribution system neutral. | DSC Appendix F.2<br>Section 2<br>IEEE 1547 Clause 4.1.2<br>OESC rule 84-030<br>CAN CSA C22.2 (R2011) No. 257-06 Clause 5.3.6<br>Brantford Power Requirement |
| | |

# 3 Additional Generator Obligations

Brantford Power will not be assessing these requirements at the preliminary stage but information may be requested during the Connection Impact Assessment or design review stage. If there are negative impacts once the generation facility is in service, it will be required to disconnect until the problem is resolved.

| **3.1 Power Quality** | |
|---|---|
| The generation facility must not negatively impact the power quality of Brantford Power's distribution system. | |
| **3.1.1 Limitation of DC injection**<br><br>The maximum DC injection value is limited to **0.5%** of the full rated output current (RMS) at the generation facility PCC after a period of six cycles following the parallelling with Brantford Power's distribution system. | DSC Appendix F.2 Section 10.3<br>IEEE 1547 Clause 4.3.1 |
| **3.1.1 Limitation of flicker**<br><br>The generation facility must not create objectionable flicker for other customers on Brantford Power's distribution system. | DSC Appendix F.2 Section 10.1<br>IEEE 1547 Clause 4.3.2<br>CAN/CSA-C61000-3-7 |
| **3.1.1 Limitation of harmonics**<br><br>Voltage distortions in percent of nominal voltage must not exceed the limits specified in IEC 610000-3-6 | IEC 61000-3-6<br>DSC Appendix F.2 Section 10.2<br>IEEE 1547 Clause 4.3.3<br>CAN/CSA-C61000-3-6 |

# 3 Warning Signs and Diagrams

The following warning sign shall be posted on the point of disconnection, generator feeder cell and switch room door to warn people of the presence of EG:

**WARNING**
**TWO POWER SOURCE**
**PARALLEL SYSTEM**

As well, a single line, permanent and legible diagram of the switching arrangement shall be placed at the Customer's control room and the switch room to indicate the position of the embedded generators and isolation points with their interlocking arrangements.

Operating designations will be assigned to the switching equipment of the generation system as required by Brantford Power. The Customer shall update the single line electrical diagram and operating diagram to include the assigned operating designations, and the switching equipment shall be identified by the operating designations as well.

# 4 Commissioning and Witnessing Requirements

The Customer shall apply for ESA electrical inspection and provide Brantford Power with the Certificate of Inspection once requirements are satisfied. Following this Brantford Power will also receive a copy of the Authorization to Connect from ESA.

Prior to commencing with commissioning and placing the EG facility in-service, Brantford Power shall be given an opportunity to review and confirm the proposed commissioning plan meets system requirements.

In addition, before the EG is brought into synchronization, as per the DSC 6.2.19, Brantford Power will require a utility representative to:

• Witness successful tests of the protection system as far as it affects the interconnection of the EG to the Brantford Power's distribution system.
• Verify interface equipment and test associated interlocking facilities.

The customer shall advise Brantford Power a minimum of fifteen working days in advance of scheduled commissioning tests, exclusive of Saturday, Sunday and Statutory Holidays, to enable Brantford Power to witness the commissioning tests. All testing shall be completed during Brantford Power's normal working hours with the Customer being responsible for all costs incurred for time spent beyond said hours.

Alternatively, Brantford Power may elect to accept a commissioning test report certified by a Professional Engineer. The commissioning verification report shall contain all interface protection settings and confirm key protective functions and interlocking requirements as previously agreed to by Brantford Power. The commissioning report shall be submitted for approval before the parallel operation of the EG facility.

On small generating units (less than 500 kVA), Brantford Power may elect to forego witness testing. All results shall be documented and a copy forwarded to Brantford Power.